DATA SHEET

SA602A
Double-balanced mixer and oscillator

Product specification
Replaces datasheet of April 17, 1990
IC17 Data Handbook

1997 Nov 07

Philips Semiconductors

PHILIPS

Double-balanced mixer and oscillator SA602A

DESCRIPTION

The SA602A is a low-power VHF monolithic double-balanced mixer with input amplifier, on-board oscillator, and voltage regulator. It is intended for high performance, low power communication systems. The guaranteed parameters of the SA602A make this device particularly well suited for cellular radio applications. The mixer is a "Gilbert cell" multiplier configuration which typically provides 18dB of gain at 45MHz. The oscillator will operate to 200MHz. It can be configured as a crystal oscillator, a tuned tank oscillator, or a buffer for an external LO. For higher frequencies the LO input may be externally driven. The noise figure at 45MHz is typically less than 5dB. The gain, intercept performance, low-power and noise characteristics make the SA602A a superior choice for high-performance battery operated equipment. It is available in an 8-lead dual in-line plastic package and an 8-lead SO (surface-mount miniature package).

FEATURES

- Low current consumption: 2.4mA typical
- Excellent noise figure: <4.7dB typical at 45MHz
- High operating frequency
- Excellent gain, intercept and sensitivity
- Low external parts count; suitable for crystal/ceramic filters
- SA602A meets cellular radio specifications

PIN CONFIGURATION

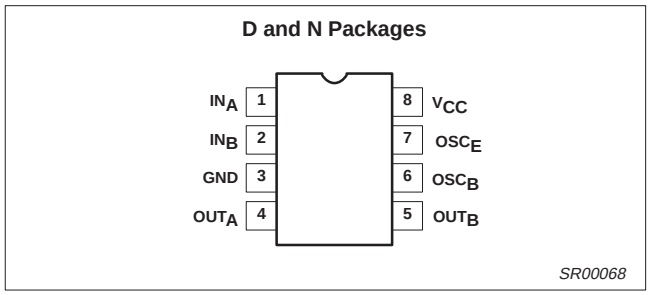

Figure 1. Pin Configuration

APPLICATIONS

- Cellular radio mixer/oscillator
- Portable radio
- VHF transceivers
- RF data links
- HF/VHF frequency conversion
- Instrumentation frequency conversion
- Broadband LANs

ORDERING INFORMATION

DESCRIPTION	TEMPERATURE RANGE	ORDER CODE	DWG #
8-Pin Plastic Dual In-Line Plastic (DIP)	-40 to +85°C	SA602AN	SOT97-1
8-Pin Plastic Small Outline (SO) package (Surface-mount)	-40 to +85°C	SA602AD	SOT96-1

ABSOLUTE MAXIMUM RATINGS

SYMBOL	PARAMETER		RATING	UNITS
V_{CC}	Maximum operating voltage		9	V
T_{STG}	Storage temperature range		-65 to +150	°C
T_A	Operating ambient temperature range SA602A		-40 to +85	°C
θ_{JA}	Thermal impedance	D package	90	°C/W
		N package	75	°C/W

BLOCK DIAGRAM

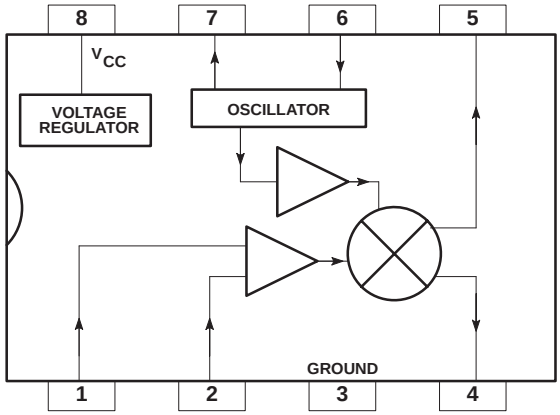

Figure 2. Block Diagram

AC/DC ELECTRICAL CHARACTERISTICS

V_{CC} = +6V, T_A = 25°C; unless otherwise stated.

SYMBOL	PARAMETER	TEST CONDITIONS	LIMITS SA602A			UNITS
			MIN	TYP	MAX	
V_{CC}	Power supply voltage range		4.5		8.0	V
	DC current drain			2.4	2.8	mA
f_{IN}	Input signal frequency			500		MHz
f_{OSC}	Oscillator frequency			200		MHz
	Noise figure at 45MHz			5.0	5.5	dB
	Third-order intercept point	RF_{IN} = -45dBm: f_1 = 45.0MHz, f_2 = 45.06MHz		-13	-15	dBm
	Conversion gain at 45MHz		14	17		dB
R_{IN}	RF input resistance		1.5			kΩ
C_{IN}	RF input capacitance			3	3.5	pF
	Mixer output resistance	(Pin 4 or 5)		1.5		kΩ

DESCRIPTION OF OPERATION

The SA602A is a Gilbert cell, an oscillator/buffer, and a temperature compensated bias network as shown in the equivalent circuit. The Gilbert cell is a differential amplifier (Pins 1 and 2) which drives a balanced switching cell. The differential input stage provides gain and determines the noise figure and signal handling performance of the system.

The SA602A is designed for optimum low power performance. When used with the SA604 as a 45MHz cellular radio second IF and demodulator, the SA602A is capable of receiving -119dBm signals with a 12dB S/N ratio. Third-order intercept is typically -13dBm (that is approximately +5dBm output intercept because of the RF gain). The system designer must be cognizant of this large signal limitation. When designing LANs or other closed systems where transmission levels are high, and small-signal or signal-to-noise issues are not critical, the input to the SA602A should be appropriately scaled.

Besides excellent low power performance well into VHF, the SA602A is designed to be flexible. The input, RF mixer output and oscillator ports can support a variety of configurations provided the designer understands certain constraints, which will be explained here.

The RF inputs (Pins 1 and 2) are biased internally. They are symmetrical. The equivalent AC input impedance is approximately 1.5k || 3pF through 50MHz. Pins 1 and 2 can be used interchangeably, but they should not be DC biased externally. Figure 5 shows three typical input configurations.

The mixer outputs (Pins 4 and 5) are also internally biased. Each output is connected to the internal positive supply by a 1.5kΩ resistor. This permits direct output termination yet allows for balanced output as well. Figure 6 shows three single ended output configurations and a balanced output.

The oscillator is capable of sustaining oscillation beyond 200MHz in crystal or tuned tank configurations. The upper limit of operation is determined by tank “Q” and required drive levels. The higher the “Q” of the tank or the smaller the required drive, the higher the permissible oscillation frequency. If the required LO is beyond oscillation limits, or the system calls for an external LO, the external signal can be injected at Pin 6 through a DC blocking capacitor. External LO should be at least $200mV_{P-P}$.

Figure 7 shows several proven oscillator circuits. Figure 7a is appropriate for cellular radio. As shown, an overtone mode of operation is utilized. Capacitor C3 and inductor L1 suppress oscillation at the crystal fundamental frequency. In the fundamental mode, the suppression network is omitted.

Figure 8 shows a Colpitts varactor tuned tank oscillator suitable for synthesizer-controlled applications. It is important to buffer the output of this circuit to assure that switching spikes from the first counter or prescaler do not end up in the oscillator spectrum. The dual-gate MOSFET provides optimum isolation with low current. The FET offers good isolation, simplicity, and low current, while the bipolar transistors provide the simple solution for non-critical applications. The resistive divider in the emitter-follower circuit should be chosen to provide the minimum input signal which will assure correct system operation.

When operated above 100MHz, the oscillator may not start if the Q of the tank is too low. A 22kΩ resistor from Pin 7 to ground will increase the DC bias current of the oscillator transistor. This improves the AC operating characteristic of the transistor and should help the oscillator to start. A 22kΩ resistor will not upset the other DC biasing internal to the device, but smaller resistance values should be avoided.

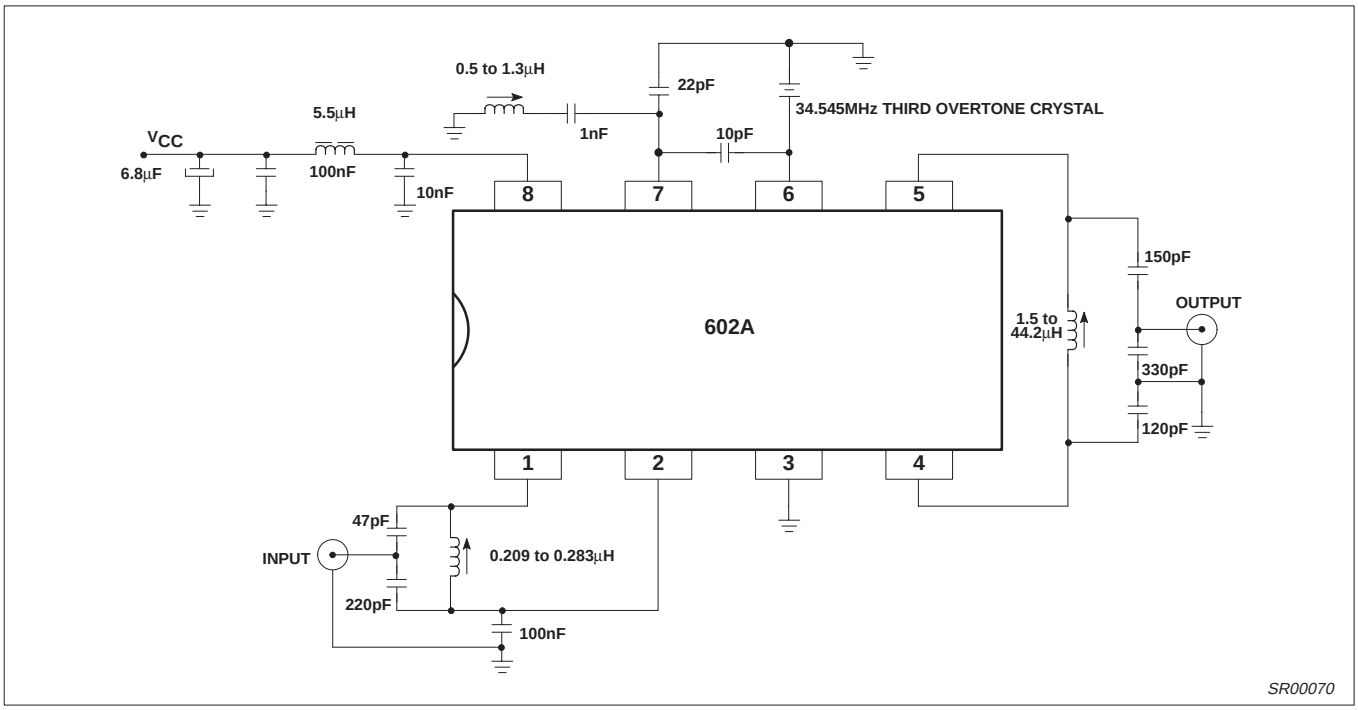

Figure 3. Test Configuration

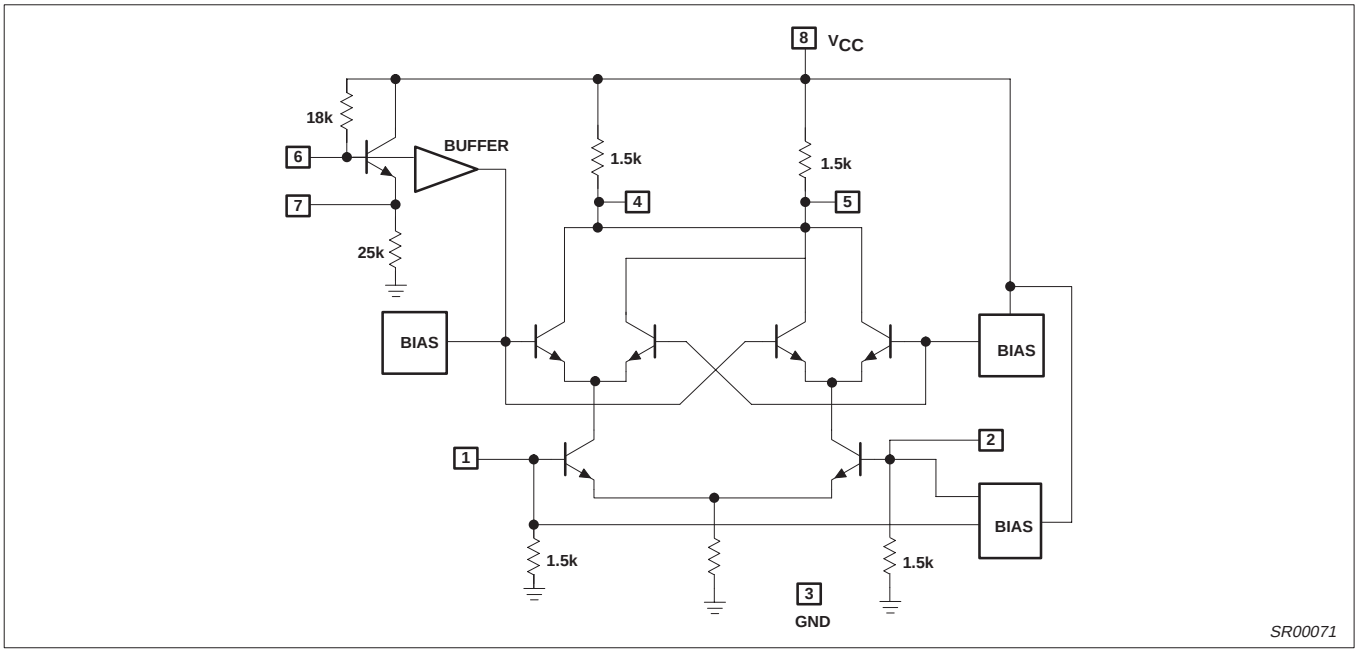

Figure 4. Equivalent Circuit

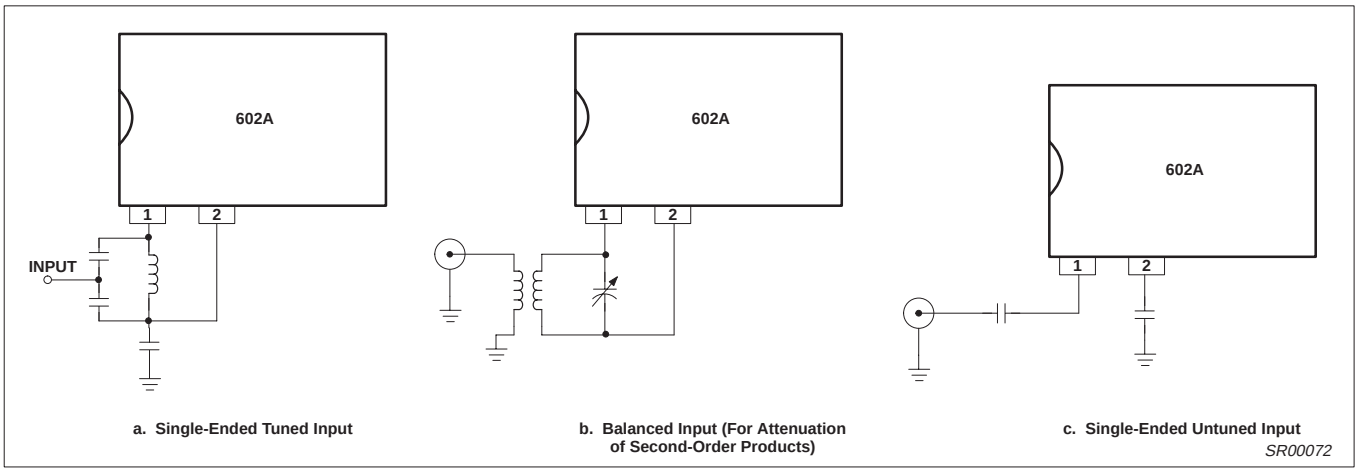

Figure 5. Input Configuration

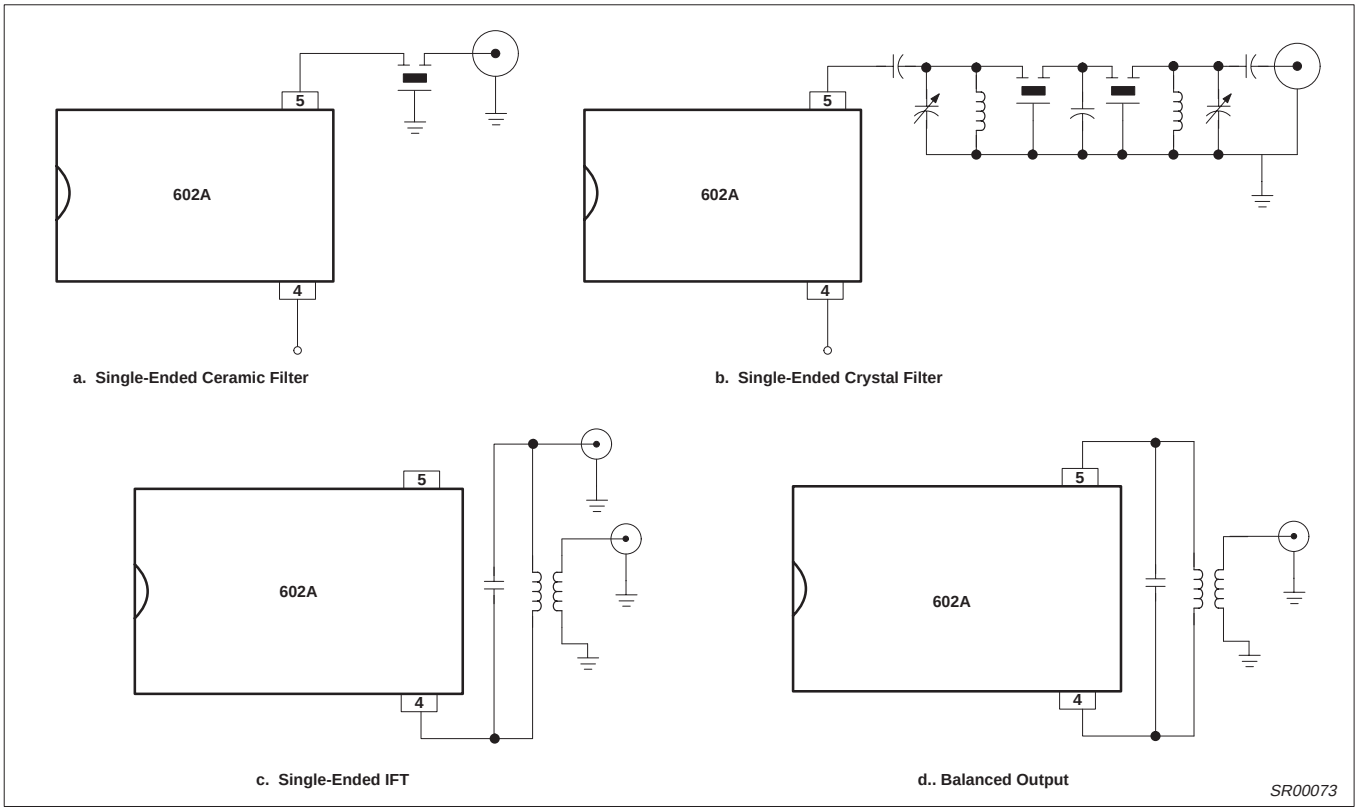

Figure 6. Output Configuration

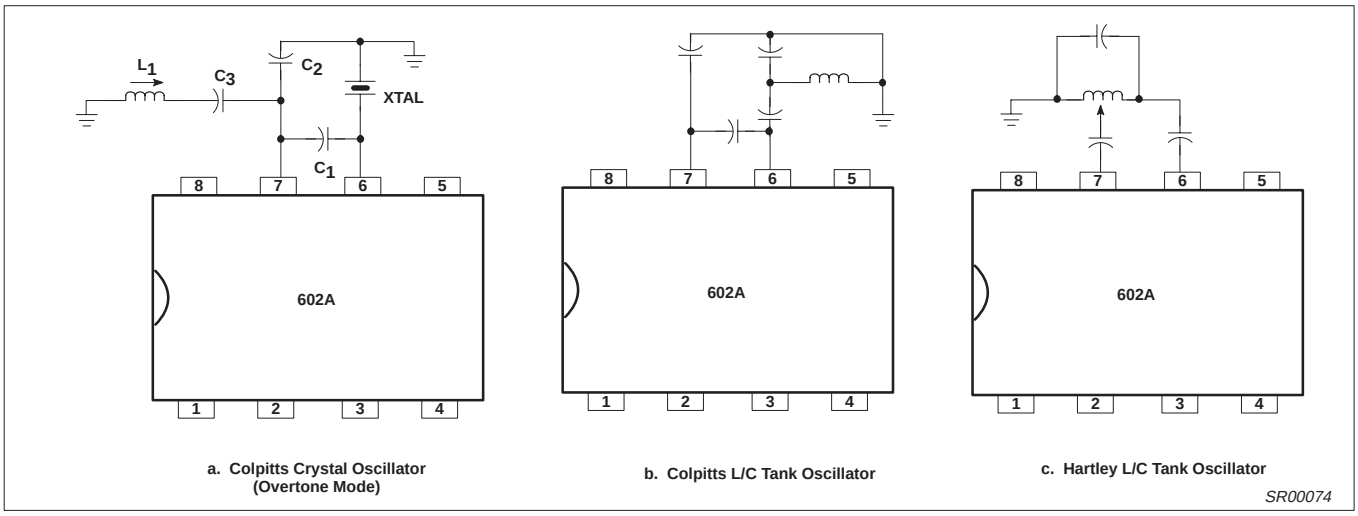

Figure 7. Oscillator Circuits

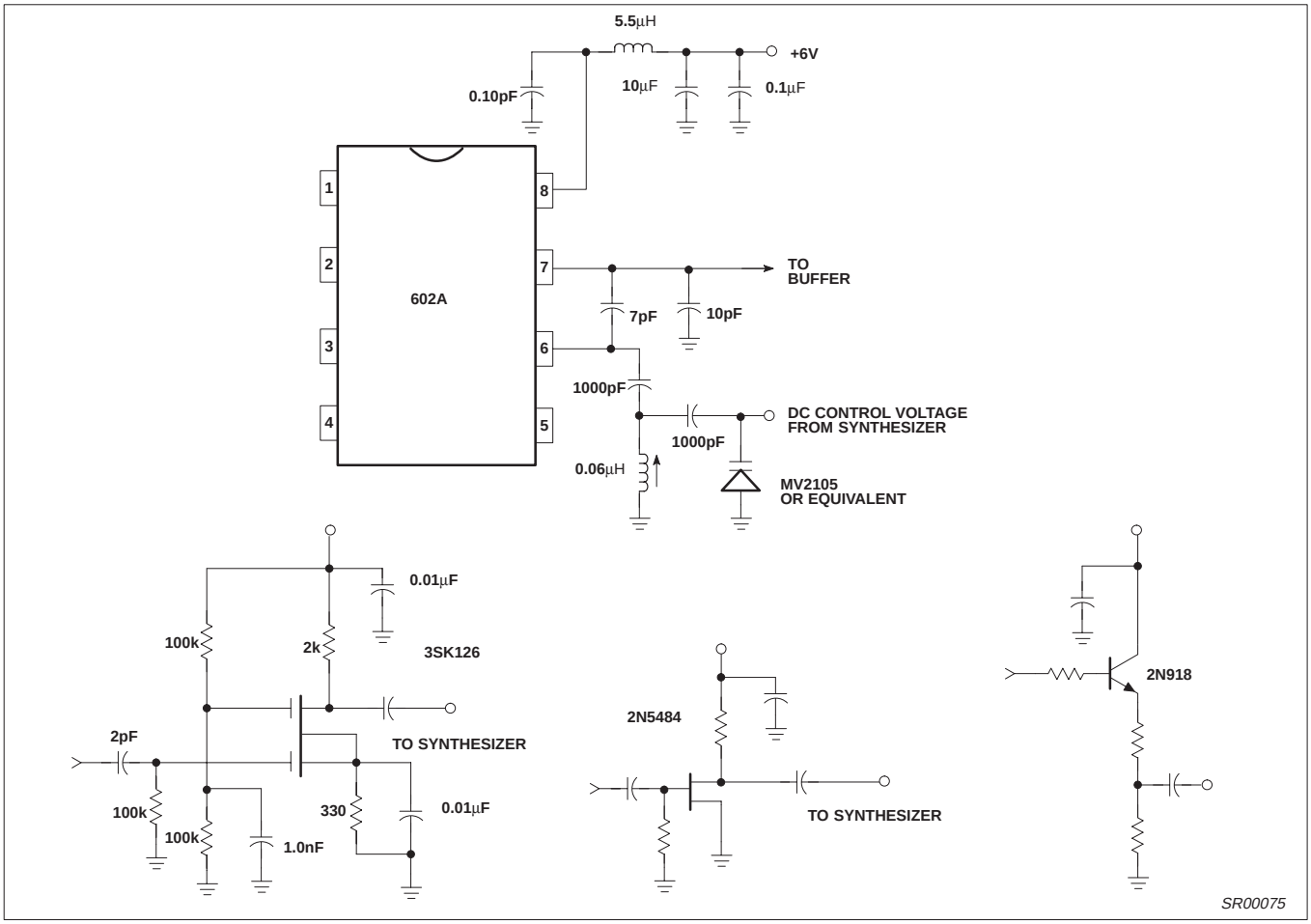

Figure 8. Colpitts Oscillator Suitable for Synthesizer Applications and Typical Buffers

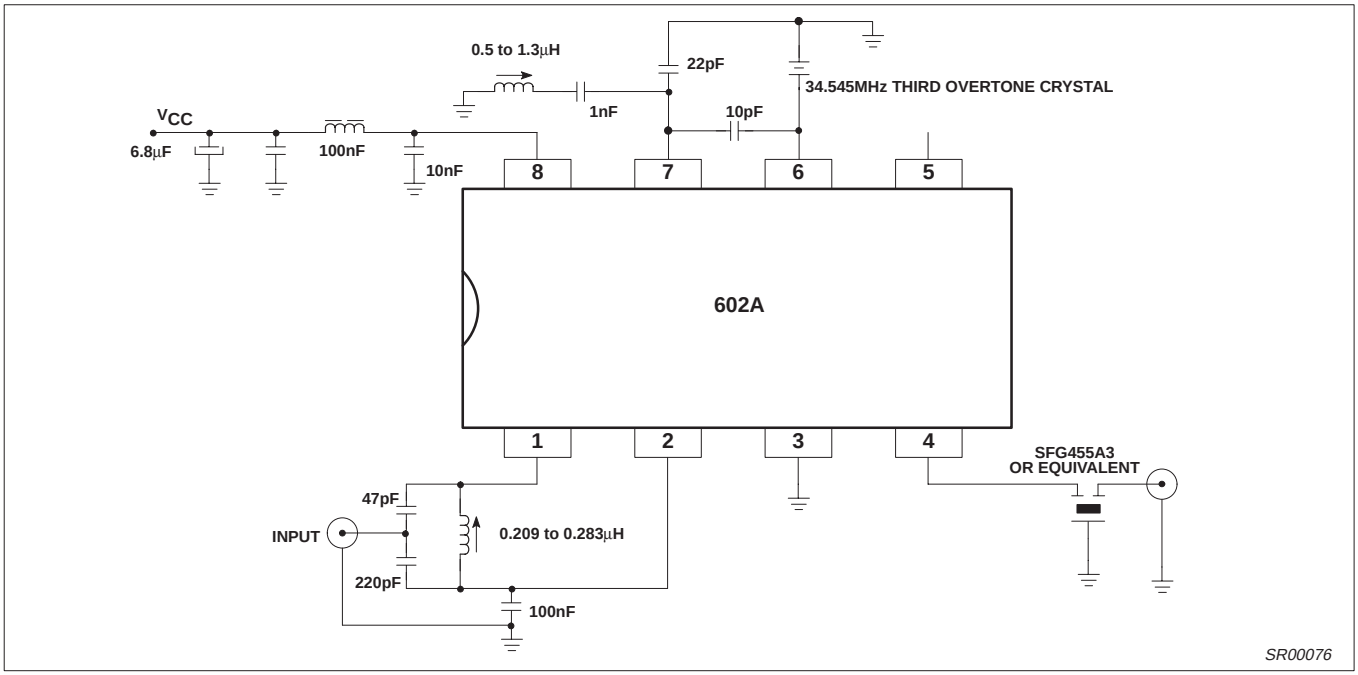

Figure 9. Typical Application for Cellular Radio

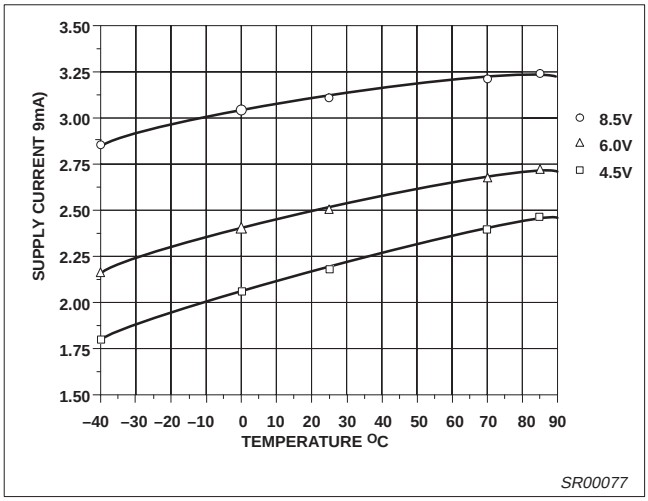

Figure 10. I_{CC} vs Supply Voltage

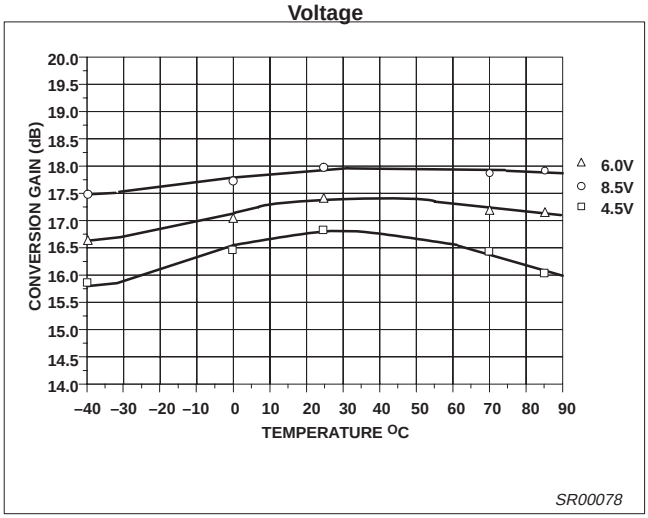

Figure 11. Conversion Gain vs Supply Voltage

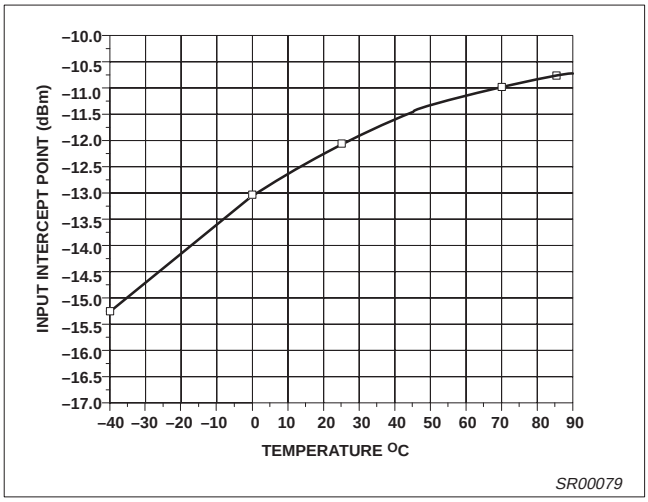

Figure 12. Third-Order Intercept Point

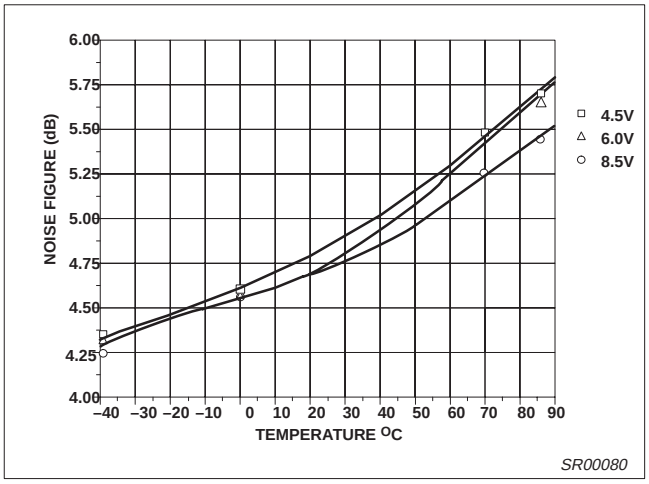

Figure 13. Noise Figure

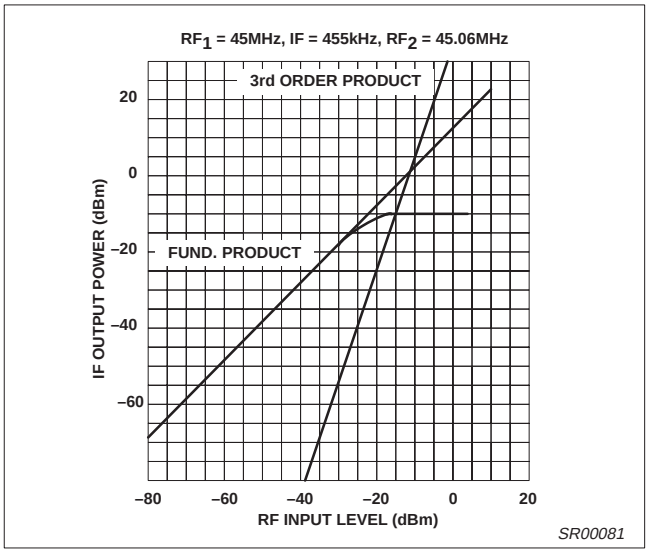

Figure 14. Third-Order Intercept and Compression

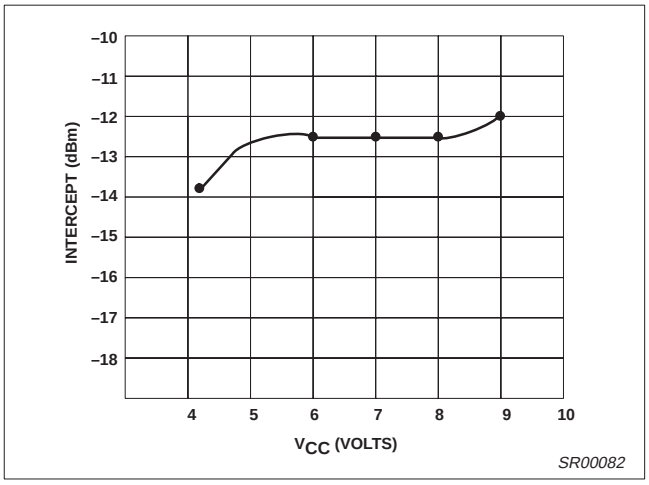

Figure 15. Input Third-Order Intermod Point vs V_{CC}

SO8: plastic small outline package; 8 leads; body width 3.9mm SOT96-1

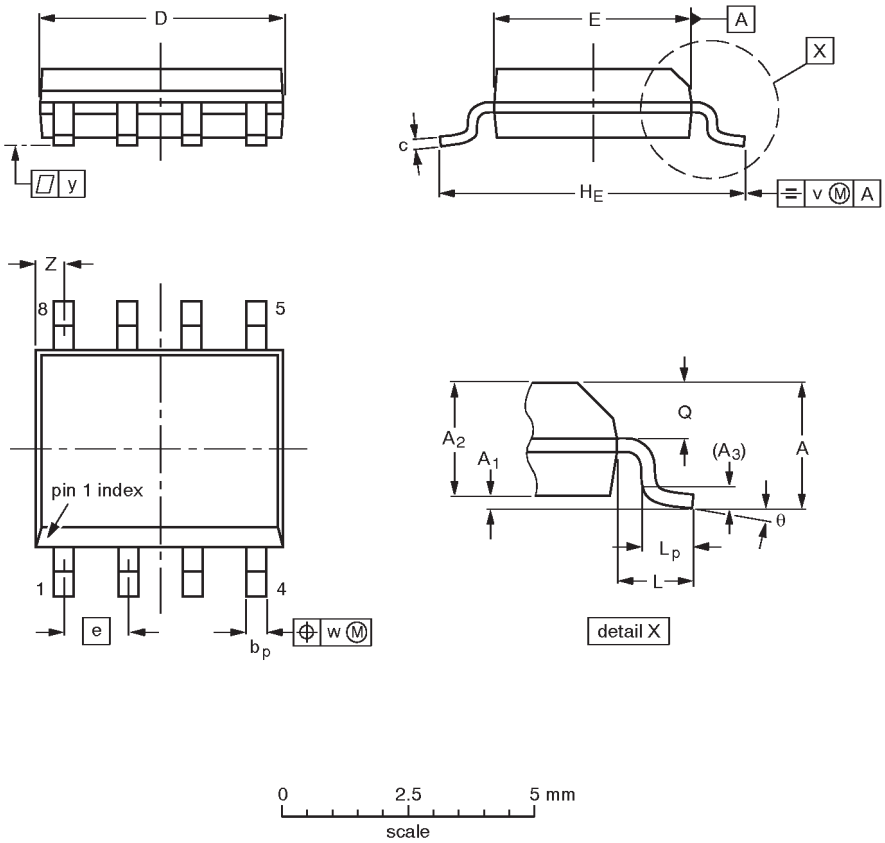

DIMENSIONS (inch dimensions are derived from the original mm dimensions)

UNIT	A max.	A_1	A_2	A_3	b_p	c	D(1)	E(2)	e	H_E	L	L_p	Q	v	w	y	Z(1)	θ
mm	1.75	0.25 0.10	1.45 1.25	0.25	0.49 0.36	0.25 0.19	5.0 4.8	4.0 3.8	1.27	6.2 5.8	1.05	1.0 0.4	0.7 0.6	0.25	0.25	0.1	0.7 0.3	8° 0°
inches	0.069	0.0098 0.0039	0.057 0.049	0.01	0.019 0.014	0.0098 0.0075	0.20 0.19	0.16 0.15	0.050	0.24 0.23	0.041	0.039 0.016	0.028 0.024	0.01	0.01	0.004	0.028 0.012	

Notes

1. Plastic or metal protrusions of 0.15 mm maximum per side are not included.
2. Plastic or metal protrusions of 0.25 mm maximum per side are not included.

OUTLINE VERSION	REFERENCES				EUROPEAN PROJECTION	ISSUE DATE
	IEC	JEDEC	EIAJ			
SOT96-1	076E03S	MS-012AA				~~92-11-17~~ 95-02-04

DIP8: plastic dual in-line package; 8 leads (300 mil) SOT97-1

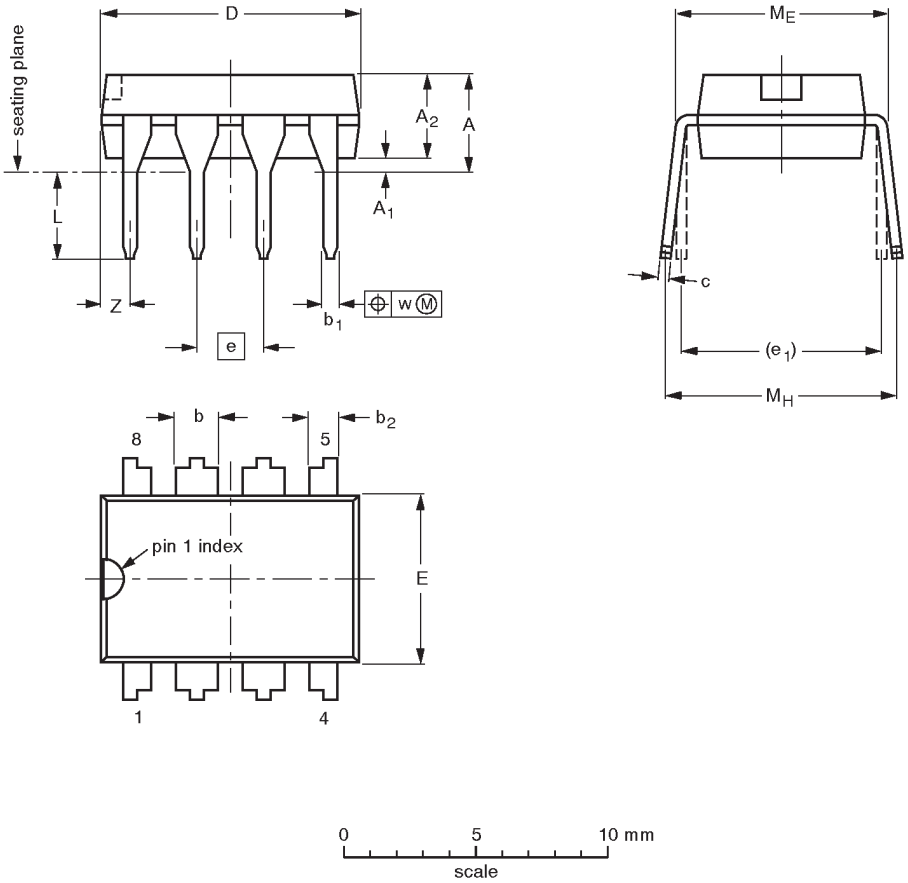

DIMENSIONS (inch dimensions are derived from the original mm dimensions)

UNIT	A max.	A_1 min.	A_2 max.	b	b_1	b_2	c	D (1)	E (1)	e	e_1	L	M_E	M_H	w	Z (1) max.
mm	4.2	0.51	3.2	1.73 1.14	0.53 0.38	1.07 0.89	0.36 0.23	9.8 9.2	6.48 6.20	2.54	7.62	3.60 3.05	8.25 7.80	10.0 8.3	0.254	1.15
inches	0.17	0.020	0.13	0.068 0.045	0.021 0.015	0.042 0.035	0.014 0.009	0.39 0.36	0.26 0.24	0.10	0.30	0.14 0.12	0.32 0.31	0.39 0.33	0.01	0.045

Note

1. Plastic or metal protrusions of 0.25 mm maximum per side are not included.

OUTLINE VERSION	REFERENCES				EUROPEAN PROJECTION	ISSUE DATE
	IEC	JEDEC	EIAJ			
SOT97-1	050G01	MO-001AN				~~92-11-17~~ 95-02-04

DEFINITIONS

Data Sheet Identification	Product Status	Definition
Objective Specification	Formative or in Design	This data sheet contains the design target or goal specifications for product development. Specifications may change in any manner without notice.
Preliminary Specification	Preproduction Product	This data sheet contains preliminary data, and supplementary data will be published at a later date. Philips Semiconductors reserves the right to make changes at any time without notice in order to improve design and supply the best possible product.
Product Specification	Full Production	This data sheet contains Final Specifications. Philips Semiconductors reserves the right to make changes at any time without notice, in order to improve design and supply the best possible product.

Philips Semiconductors and Philips Electronics North America Corporation reserve the right to make changes, without notice, in the products, including circuits, standard cells, and/or software, described or contained herein in order to improve design and/or performance. Philips Semiconductors assumes no responsibility or liability for the use of any of these products, conveys no license or title under any patent, copyright, or mask work right to these products, and makes no representations or warranties that these products are free from patent, copyright, or mask work right infringement, unless otherwise specified. Applications that are described herein for any of these products are for illustrative purposes only. Philips Semiconductors makes no representation or warranty that such applications will be suitable for the specified use without further testing or modification.

LIFE SUPPORT APPLICATIONS
Philips Semiconductors and Philips Electronics North America Corporation Products are not designed for use in life support appliances, devices, or systems where malfunction of a Philips Semiconductors and Philips Electronics North America Corporation Product can reasonably be expected to result in a personal injury. Philips Semiconductors and Philips Electronics North America Corporation customers using or selling Philips Semiconductors and Philips Electronics North America Corporation Products for use in such applications do so at their own risk and agree to fully indemnify Philips Semiconductors and Philips Electronics North America Corporation for any damages resulting from such improper use or sale.

Philips Semiconductors
811 East Arques Avenue
P.O. Box 3409
Sunnyvale, California 94088–3409
Telephone 800-234-7381

© Copyright Philips Electronics North America Corporation 1997
All rights reserved. Printed in U.S.A.

Let's make things better.

Philips Semiconductors

PHILIPS